# PW-9P-MD 1.5 SG

## DIMENSIONAL SCHEMATIC AND PERFORMANCE

### DIMENSIONS mm

not to scale
specifications are subject to change

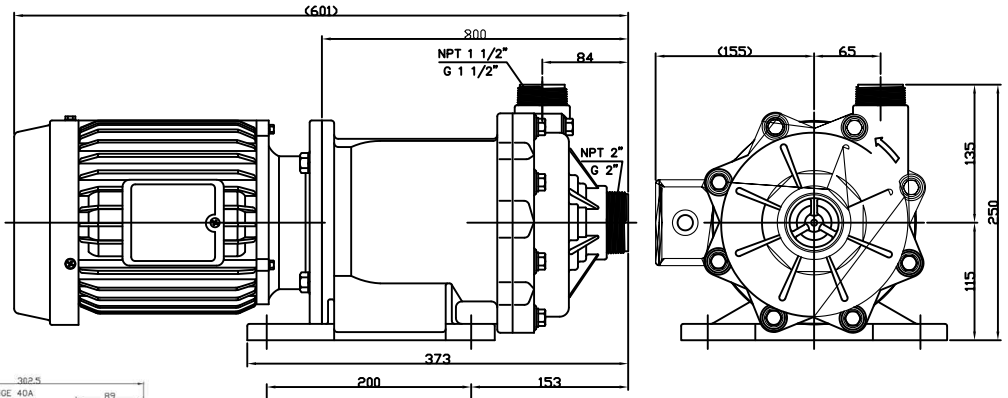


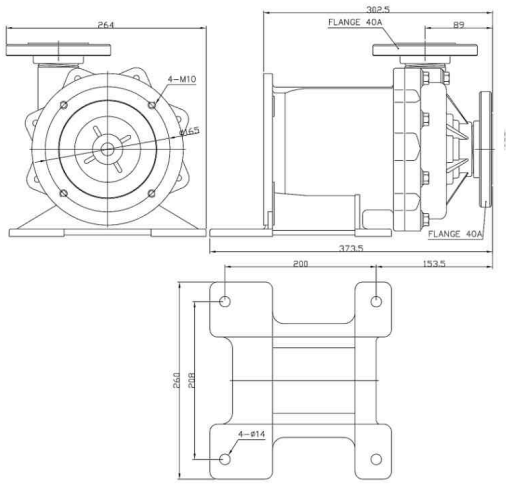


Outlet Options:
40 mm threaded
1 1/2" BSP
40 mm flanges

Inlet Options:
50 mm threaded
2" BSP
50 mm flanges

Standard Motor: 2.2 kW

Details may change depending upon the motor specificed

### PERFORMANCE

Tests obtained
50 hz 2860 rpm
1.5 SG

130 mm impeller

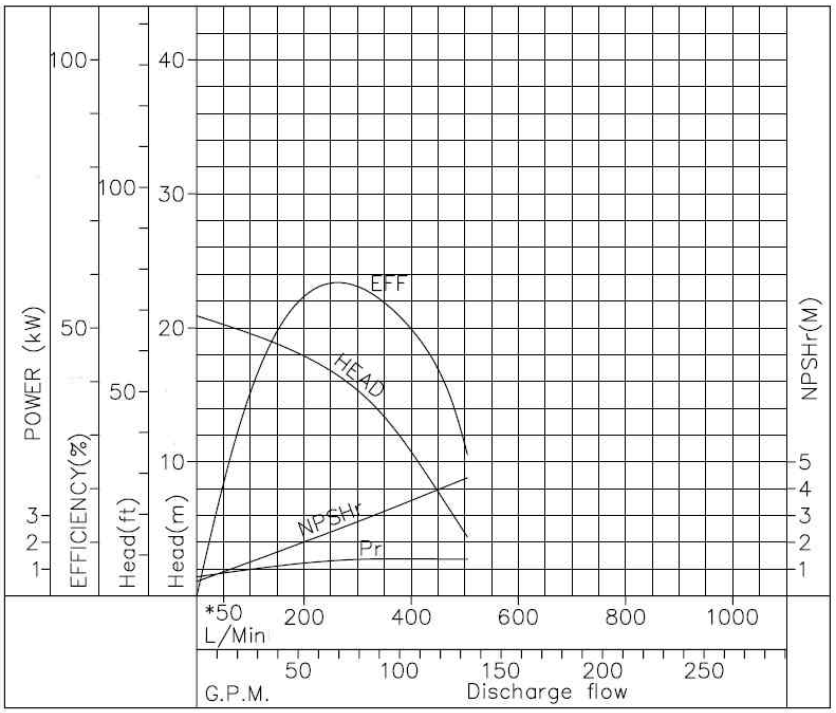


Performance may change depending upon the motor specificed

March May Ltd, Howard Road, Eaton Socon, St Neots PE19 8NZ, England
Tel: +44 (0) 1480 214444 Fax: +44 (0) 1480 405336 E-Mail: sales@marchmay.co.uk Website: www:marchmay.co.uk